| Customer Approved | |
|---|---|

| REV NO. | Contents | Date |
|---|---|---|
| V0 | First release | 2025-11-04 |
| V1 | 修改连接器插接方向 | 2025-11-22 |
| | | |

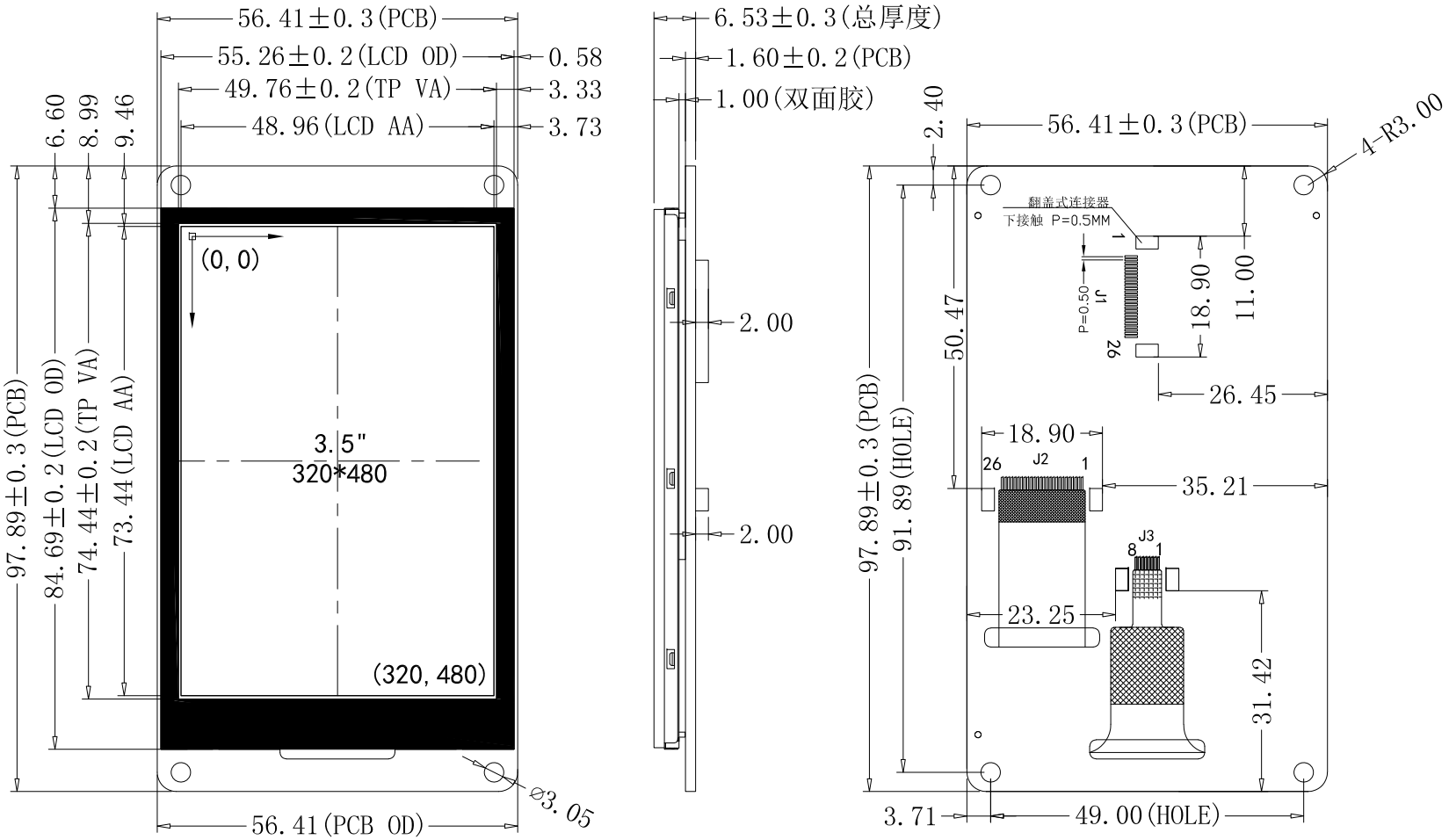


J1interface

| NO. | SYMBC |
|---|---|
| 1 | VCC5V |
| 2 | VCC5V |
| 3 | CTP_INT |
| 4 | CTP_SCL |
| 5 | CTP_SDA |
| 6 | CTP_RST |
| 7 | BL_CRT |
| 8 | NC |
| 9 | GND |
| 10 | NC |
| 11 | NC |
| 12 | GND |
| 13 | DSI_CLKP |
| 14 | DSI_CLKN |
| 15 | GND |
| 16 | DSI_DOP |
| 17 | DSI_DON |
| 18 | GND |
| 19 | NC |
| 20 | NC |
| 21 | GND |
| 22 | NC |
| 23 | NC |
| 24 | GND |
| 25 | DSI_RST |
| 26 | GND |

WKS 慧勤智远

| | | | | | | | | | |
|---|---|---|---|---|---|---|---|---|---|
| Display Size: | 3.5" | LCD Driver IC: | ST7796 | Pixel Pitch: | 0.153mm x 0.153mm | Product NO: | WKS35HV035-WCT | | |
| Display Mode: | Normally Black | Operating Temp. | -20℃ TO +70℃ | Brightness: | 300CD/M^2 | Parts NO: | TOUCH Module | APPD: | Jason |
| Viewing Direction: (Gray Inversion) | ALL VIEW | Storage Temp. | -30℃ TO +80℃ | Backlight: | 6 Parallel LED | REV: V1 | Unit: mm | CHKD: | Ljune |
| Resolution: | 320(RGB)X480 | Structure: | LCD+C-TOUCH+PCB | Material Note: | ROHS Request | Date: 2025-11-22 | Scale: 1:1 | DWN: | Monica |
| THIS DRAWING IS PROPERTY OF WAIKEN SMART CO. LTD, IT CANNOT BE REPRODUCED WITHOUT PERMISSION. | | | | | | Unmarked Tolerance: ±0.2mm | | Sheet: | 1 OF 1 |